WINTER REFRIGERATION

Industrial Equipment Manufacturing L.L.C

Standard Pack

WINTER Standard Pack

Introduction:
"Winter Refrigeration Industrial Equipment Manufacturing LLC" is an industrial refrigeration manufacturing company with more than 40 years of experience in designing, engineering, manufacturing and supplying solutions for industrial refrigeration applications.
Winter's top most priority is customer satisfaction and hence our team of dedicated engineers and technicians work tirelessly to exceed customers' expectations in producing and providing services.

"WINTER StandardPack" is the core product of our company, and the components for this compressor package are from reputed international brands of the refrigeration industry.
Our StandardPack utilizes twin screw compressors from the leading manufacturers of the compressor brands which have high safety standards. Our extensive product portfolio covers wide range of compressor models with comprehensive cooling capacities ranging from 45 kW to 2500 kW adhering strictly to the standards such as ASME, PED, etc.
WINTER always prioritizes quality, and hence, by keeping our production in-house, we are able to closely monitor the production process from sourcing raw material to final production, resulting in superior quality products.

Benefits and features
WINTER StandardPack is a plug and play solution designed for reliable and long lasting operations while considering an easy installation, less service and a convenient handling for transport. Furthermore, the package is made ready to be positioned in the plant room with only piping and power cabling remaining.

Ammonia packages
WINTER is an environmental conscious organization and considers natural refrigerants for its refrigeration packages (mostly ammonia) which have no adverse impact onto the environment i.e., zero GWP and zero ODP.
However, our expertise is not only limited to R717 and WINTER is capable of delivering its standard pack with any common refrigerant.

Energy saving
WINTER refrigeration packages are designed to be highly energy efficient by employing advanced technology and features that minimizes the energy consumption such as high efficiency compressors and motors which can also be incorporated with VFD as per customer request. WINTER StandardPack scores with its high COP, therefore reducing the operating cost.

WINTER Standard Pack

Versatile Applications

WINTER StandardPack is eligible for all processes where reliable low temperatures are requested.
The main applications include:

- Cold Storages
- Freezers
- Air-Conditioning
- Food Processing
- Ice Processing
- Meat and Poultry Processing
- Fish processing
- Dairy
- Vegetable Packaging Industries
- Ice Rink
- Refinery, gas and petrochemical industries
  Etc.

Control Panel - HMI

WINTER Control Panel contains 7” or 9” Siemens high resolution touch display. While using the touch buttons the user is able to switch within the different levels and HMI-views to control and observe the plant from A to Z.

WINTER HMI Facts:

- High Resolution Touch Display
- Real-time Troubleshooting on the HMI screen
- Automatic maintenance advice
- Display of the motor control valves for protection purpose
- Alarm history
- Set point adjustment via HMI screen Parameter trend graph

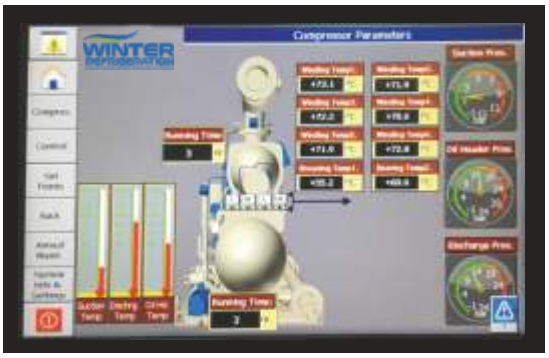

Clearly arranged process values:

- Temperature
- Pressure
- Capacity control
- Motor current & RPM

Package Control

The WINTER StandardPack is equipped with a Siemens Simatic Logic Controller for automation and the corresponding control panel to complete the package with high class international brands.

The implemented series in our packages are:
- Simatic S7-1200
- Simatic S7-1500

Other Series can be provided upon customer request.

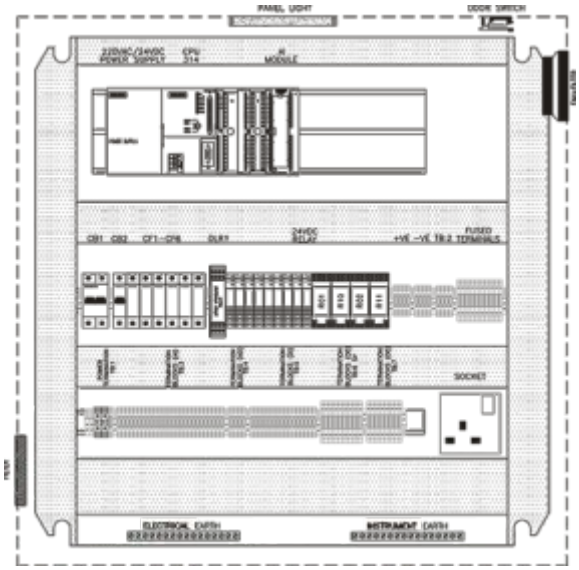

Winter Refrigeration control panel comes with a CE mark, along with Simatic control which has a precise and compact design with a high reliability showing the following facts:

- Dimensions: 800x800 mm
- Remote access for maintenance
- Rank 55 "International Protection Code (IP)"
- Communications: Profibus (Process Area Gateway), Profinet (process area network)", "MOD BUS, OPC"
- Reliability
- Robustness
- Expandability
- Optional Data and event logging
- GPRS, SMS based alarms and logs (on request)

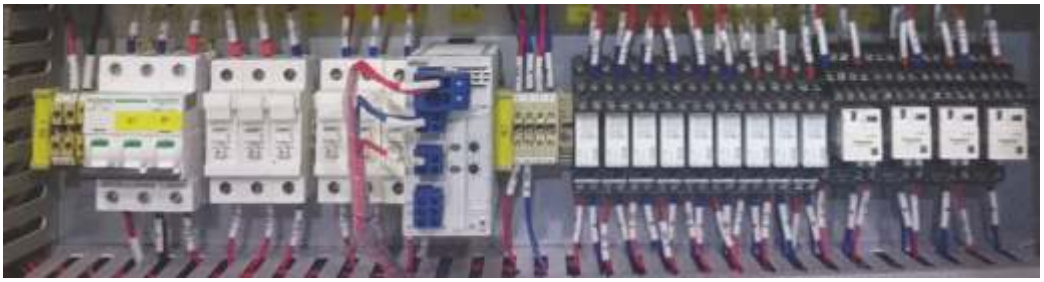

WINTER Standard Pack - WRV Series

WINTER Standard Pack - XRV Series

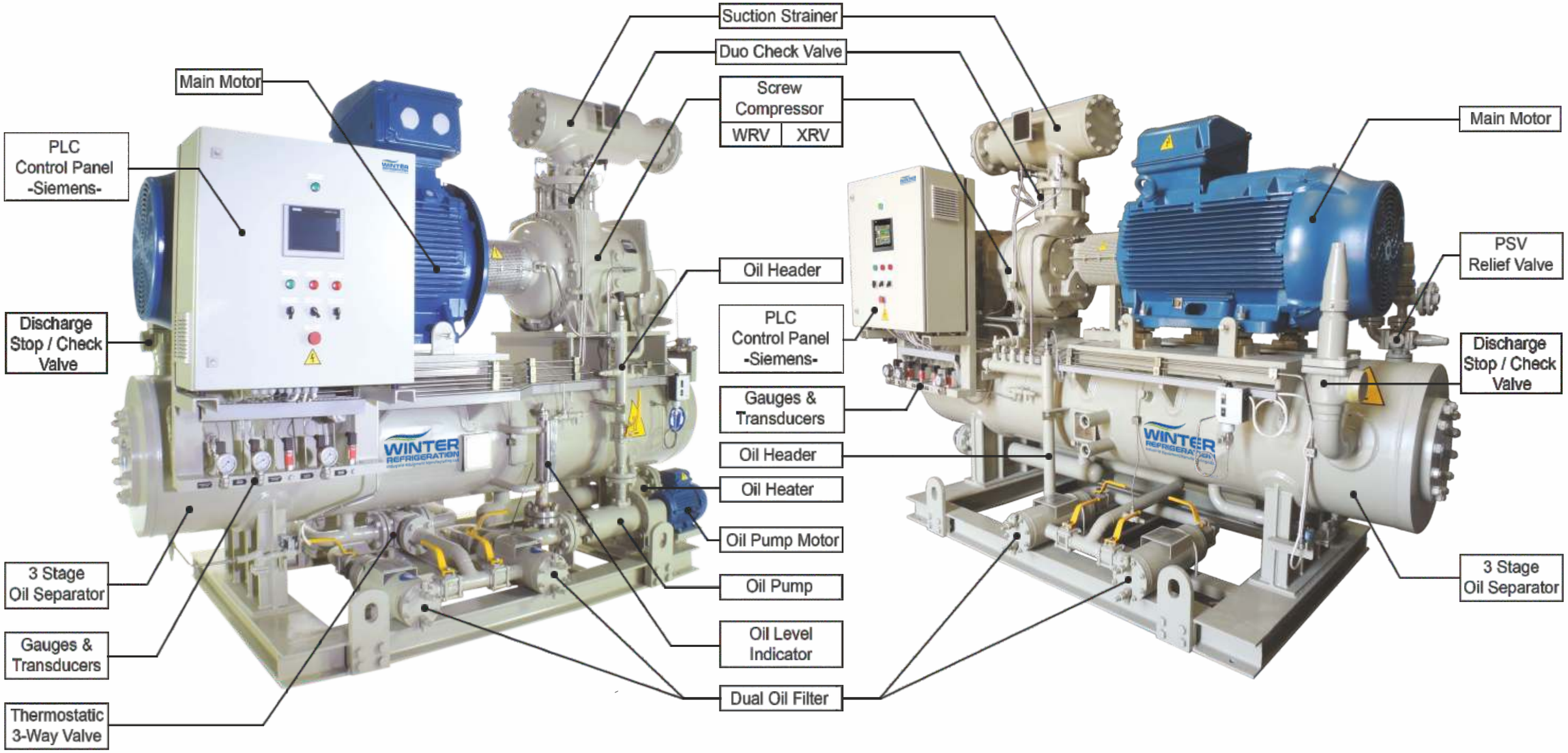

WINTER Pack XRV series

XRV-127

Model XRV-127	Unit	TE = -5°C							
		CMSC-1271R1X01		CMSC-1271R3X01		CMSC-1271R4X01		CMSC-1271R5X01	
Frequency	Hz	50	60	50	60	50	60	50	60
Cooling Capacity nominal	kW	204	249	285	346	357	433	426	435
	TR	58	71	81	98	101	123	121	124
Absorbed Power	kW	47.3	57.2	65.1	78.9	81.3	98.8	97.0	99.3
Coefficient of Performance	COP	4.31	4.35	4.37	4.39	4.39	4.39	4.39	4.38
Instaled Electric Motor	kW	55	75	75	90	110	110	110	110

Model XRV-127	Unit	TE = -35°C							
		CMSC-1271R1X01		CMSC-1271R3X01		CMSC-1271R4X01		CMSC-1271R5X01	
Frequency	Hz	50	60	50	60	50	60	50	60
Cooling Capacity nominal	kW	50	62	72	88	91	111	109	133
	TR	14	18	20	25	26	32	31	38
Absorbed Power	kW	36.3	43.8	49.8	60.5	62.3	75.7	74.3	79.8
Coefficient of Performance	COP	1.39	1.42	1.44	1.45	1.46	1.47	1.47	1.66
Instaled Electric Motor	kW	45	55	55	75	75	90	90	90

XRV-163

Model XRV-163	Unit	TE = -5°C				TE = -35°C			
		CMSC-163165X01		CMSC-163193X01		CMSC-163165X01		CMSC-163193X01	
Frequency	Hz	50	60	50	60	50	60	50	60
Cooling Capacity nominal	kW	431	532	521	642	112	140	136	169
	TR	122	151	148	182	32	40	39	48
Absorbed Power	kW	96.6	117.6	115.8	140.9	74.8	91.1	89.7	109.1
Coefficient of Performance	COP	4.46	4.53	4.50	4.30	1.50	1.54	1.52	1.55
Instaled Electric Motor	kW	110	132	132	160	90	110	110	132

XRV-204

Model XRV-204	Unit	TE = -5°C							
		CMSC-204110X01		CMSC-204145X01		CMSC-204165X01		CMSC-204193X01	
Frequency	Hz	50	60	50	60	50	60	50	60
Cooling Capacity nominal	kW	616	749	857	1038	946	1146	1047	1268
	TR	175	213	243	295	269	325	297	360
Absorbed Power	kW	139.7	170.1	178.2	217.0	202.5	246.5	221.1	269.2
Coefficient of Performance	COP	4.41	4.40	4.81	4.78	4.67	4.65	4.73	4.71
Instaled Electric Motor	kW	160	200	200	250	250	280	250	315

Model XRV-204	Unit	TE = -35°C							
		CMSC-204110X01		CMSC-204145X01		CMSC-204165X01		CMSC-204193X01	
Frequency	Hz	50	60	50	60	50	60	50	60
Cooling Capacity nominal	kW	164	200	228	277	252	306	278	338
	TR	47	57	65	79	71	87	79	96
Absorbed Power	kW	108.3	131.7	138.1	168.0	156.9	190.9	173.7	211.3
Coefficient of Performance	COP	1.51	1.52	1.65	1.65	1.60	1.60	1.60	1.60
Instaled Electric Motor	kW	132	160	160	200	185	220	200	250

Notes:
Tables based on Ammonia (R717); Other refrigerant on request;
Oil cooling applicable with water or thermosyphon
Condensing temperature = 35°C; TE = Evaporation Temperature
Capacities without considering an economizer; Superheat 2K; Subcooling 5K

WINTER Pack WRV series

WRV-163

Model WRV-163	Unit	TE = -5°C				TE = -35°C			
		CMSC-163145W01		CMSC-163180W01		CMSC-163145W01		CMSC-163180W01	
Frequency	Hz	50	60	50	60	50	60	50	60
Cooling Capacity nominal	kW	416	507	516	629	103	127	129	158
	TR	118	144	147	179	29	36	37	45
Absorbed Power	kW	90.8	109.2	110.5	132.9	67.8	81.6	83.2	100.1
Coefficient of Performance	COP	4.58	4.64	4.67	4.73	1.52	1.55	1.55	1.58
Instaled Electric Motor	kW	110	132	132	160	75	110	110	132

WRV-204

Model WRV-204	Unit	TE = -5°C							
		CMSC-204110W01		CMSC-204145W01		CMSC-204165W01		CMSC-204193W01	
Frequency	Hz	50	60	50	60	50	60	50	60
Cooling Capacity nominal	kW	638	773	867	1050	957	1159	1077	1304
	TR	181	219	246	298	272	329	306	370
Absorbed Power	kW	142.6	173.3	192.4	233.8	205.3	249.4	231.0	280.6
Coefficient of Performance	COP	4.47	4.46	4.51	4.49	4.66	4.65	4.66	4.65
Instaled Electric Motor	kW	160	200	220	280	250	280	280	355

Model WRV-204	Unit	TE = -35°C							
		CMSC-204110W01		CMSC-204145W01		CMSC-204165W01		CMSC-204193W01	
Frequency	Hz	50	60	50	60	50	60	50	60
Cooling Capacity nominal	kW	157	192	217	264	241	293	281	342
	TR	45	54	62	75	68	83	80	97
Absorbed Power	kW	103.6	125.8	141.7	172.0	151.9	184.4	172.7	209.6
Coefficient of Performance	COP	1.52	1.52	1.53	1.53	1.58	1.59	1.63	1.63
Instaled Electric Motor	kW	132	160	185	200	185	220	200	250

WRV-255

Model WRV-255	Unit	TE=-5°C									
		CMSC-255110W01		CMSC-255130W01		CMSC-255145W01		CMSC-255165W01		CMSC-255193W01	
Frequency	Hz	50	60	50	60	50	60	50	60	50	60
Cooling Capacity nominal	kW	1266	1528	1424	1719	1720	2077	1899	2293	2137	2580
	TR	360	434	404	488	489	590	539	651	607	733
Absorbed Power	kW	269.2	331.6	301.8	371.7	377.4	464.9	401.9	494.6	451.9	556.0
Coefficient of Performance	COP	4.70	4.61	4.72	4.63	4.56	4.47	4.73	4.64	4.73	4.64
Instaled Electric Motor	kW	315	400	355	450	450	560	450	560	500	630

Model WRV-255	Unit	TE=-35°C									
		CMSC-255110W01		CMSC-255130W01		CMSC-255145W01		CMSC-255165W01		CMSC-255193W01	
Frequency	Hz	50	60	50	60	50	60	50	60	50	60
Cooling Capacity nominal	kW	324	393	373	452	440	534	485	590	560	678
	TR	92	112	106	128	125	152	138	167	159	193
Absorbed Power	kW	210.7	259.6	225.3	277.5	295.2	363.5	313.3	385.4	336.0	413.1
Coefficient of Performance	COP	1.54	1.51	1.66	1.63	1.49	1.47	1.55	1.53	1.67	1.64
Instaled Electric Motor	kW	250	315	250	315	355	400	355	450	400	500

Notes:
Tables based on Ammonia (R717); Other refrigerant on request;
Oil cooling applicable with water or thermosyphon
Condensing temperature = 35°C; TE = Evaporation Temperature
Capacities without considering an economizer; Superheat 2K; Subcooling 5K

WINTER Standard Pack (Economizer)

XRV-127

Model XRV-127	Unit	TE = -40°C							
		CMSC-1271R1X01		CMSC-1271R3X01		CMSC-1271R4X01		CMSC-1271R5X01	
Frequency	Hz	50	60	50	60	50	60	50	60
Cooling Capacity nominal	kW	45	57	65	81	83	102	100	103
	TR	13	16	19	23	24	29	29	29
Absorbed Power	kW	37.5	45.0	50.9	61.2	63.0	76.1	74.8	76.5
Coefficient of Performance	COP	1.21	1.26	1.29	1.32	1.32	1.35	1.34	1.34
Instaled Electric Motor	kW	45	55	75	75	75	90	90	90

XRV-163

Model XRV-163	Unit	TE = -40°C			
		CMSC-163165X01		CMSC-163193X01	
Frequency	Hz	50	60	50	60
Cooling Capacity nominal	kW	103	130	125	158
	TR	29	37	36	45
Absorbed Power	kW	74.6	90.3	89.3	108.2
Coefficient of Performance	COP	1.39	1.44	1.40	1.46
Instaled Electric Motor	kW	90	110	110	132

XRV-204

Model XRV-204	Unit	TE = -40°C							
		CMSC-204110X01		CMSC-204145X01		CMSC-204165X01		CMSC-204193X01	
Frequency	Hz	50	60	50	60	50	60	50	60
Cooling Capacity nominal	kW	155	189	216	263	238	290	263	321
	TR	44	54	61	75	68	82	75	91
Absorbed Power	kW	105.6	128.3	134.9	163.8	153.2	186.1	171.3	208.1
Coefficient of Performance	COP	1.47	1.48	1.60	1.60	1.55	1.56	1.54	1.54
Instaled Electric Motor	kW	132	160	160	185	185	220	200	250

WRV-163

Model WRV-163	Unit	TE = -40°C			
		CMSC-163145W01		CMSC-163180W01	
Frequency	Hz	50	60	50	60
Cooling Capacity nominal	kW	96	118	120	148
	TR	27	34	34	42
Absorbed Power	kW	65.1	78.1	79.9	95.8
Coefficient of Performance	COP	1.47	1.51	1.50	1.55
Instaled Electric Motor	kW	75	90	90	110

WRV-204

Model WRV-204	Unit	TE = -40°C							
		CMSC-204110W01		CMSC-204145W01		CMSC-204165W01		CMSC-204193W01	
Frequency	Hz	50	60	50	60	50	60	50	60
Cooling Capacity nominal	kW	148	180	203	248	226	276	263	322
	TR	42	51	58	71	64	78	75	91
Absorbed Power	kW	98.8	119.8	135.1	163.8	145.0	175.7	167.3	202.8
Coefficient of Performance	COP	1.49	1.50	1.50	1.52	1.56	1.57	1.57	1.59
Instaled Electric Motor	kW	110	160	160	185	185	200	200	250

Notes:
Tables based on Ammonia (R717); Other refrigerant on request;
Oil cooling applicable with water or thermosyphon
Condensing temperature = 35°C; TE = Evaporation Temperature
Capacities without considering an economizer; Superheat 2K; Subcooling 5K

Layout / Dimention

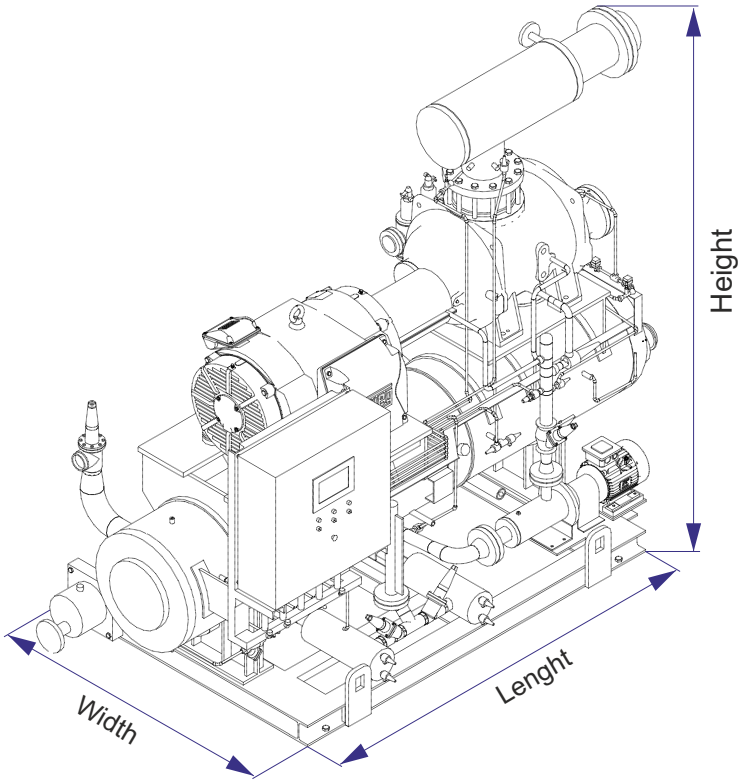

Dimention

Model	Unit	WRV-255	WRV-204	WRV-163	XRV-204	XRV-163	XRV-127
Lenght	mm	4753	3265	3150	3250	2850	2850
Width	mm	2026	1550	1550	1550	1500	1500
Height	mm	3000	2450	2225	2100	2100	2100

Winter Refrigeration Industrial Equipment Manufacturing L.L.C.

Your trustful partner for Industrial Refrigeration Applications

Winter Refrigeration Industrial Equipment Manufacturing L.L.C.

Head office: P.O.Box: 39156, Dubai - U.A.E
Tel :+971 4 324 1075 Fax: 971 4 324 1083 Email: info@winter.ae, www.winter.ae